Parts List			
ITEM	QTY	PART #	DESCRIPTION
1	1	0002043	Apron (In Opening)
2	1	0002040	Truck Assembly
2.1	1	0001833	Roller Bearing Truck
2.4	1	3/4 - 10 UNC JN	Jam Hex Nut - Grade 5, Zinc
2.5	1	HN 3/4 - 10 Zinc-5	Hex Nut - Grade 5, Zinc
2.6	1	0000543	Needle Roller Thrust Bearing, 3/4" Shaft
2.7	2	0002129-06	Thrust Washer, 3/4" ID x 1/16 Thk
2.8	1	3/4 LW Zinc	Lock Washer, Zinc
2.9	2	FW 3/4 - narrow - Type B zinc	Flat Washer-zinc
2.10	1	0002132	9035 Slide-Fold Pendant Bolt

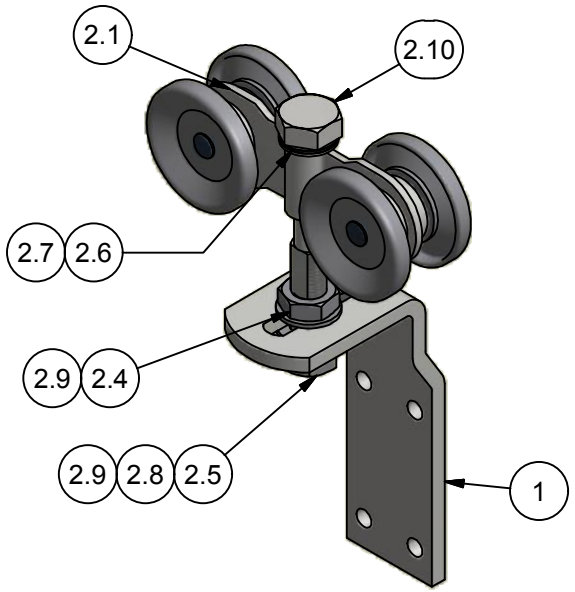

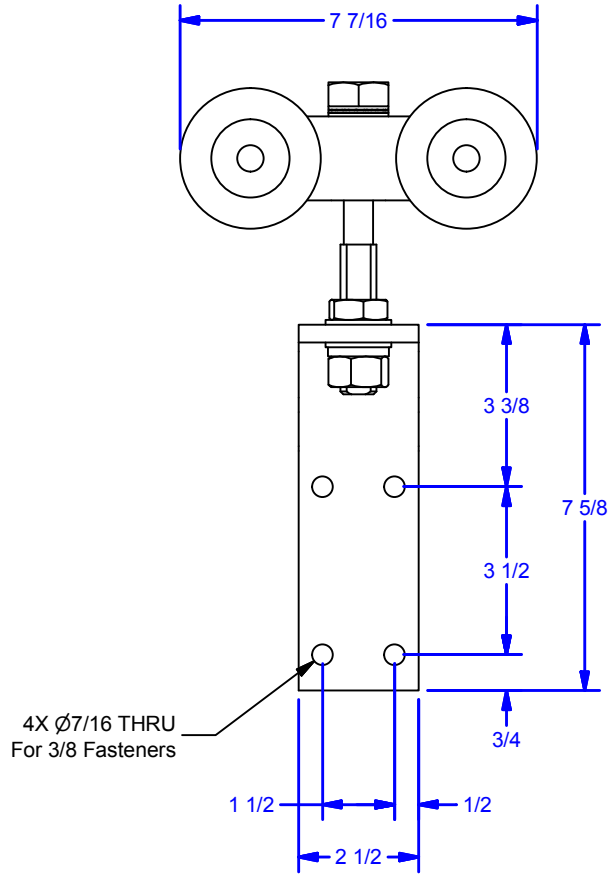

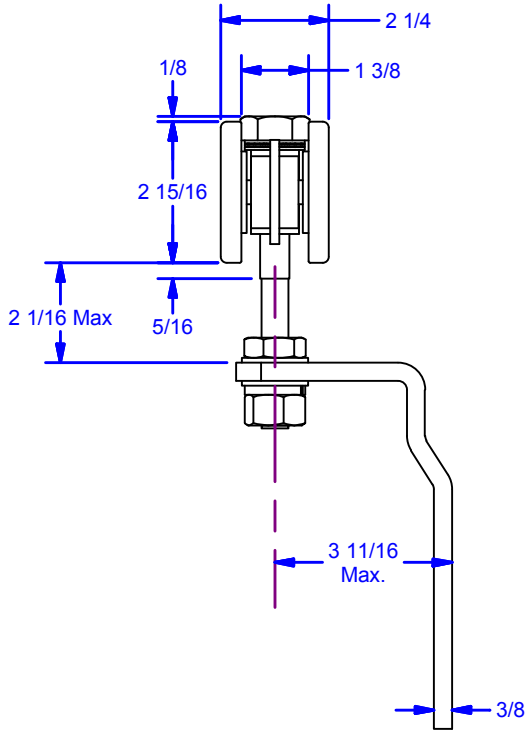

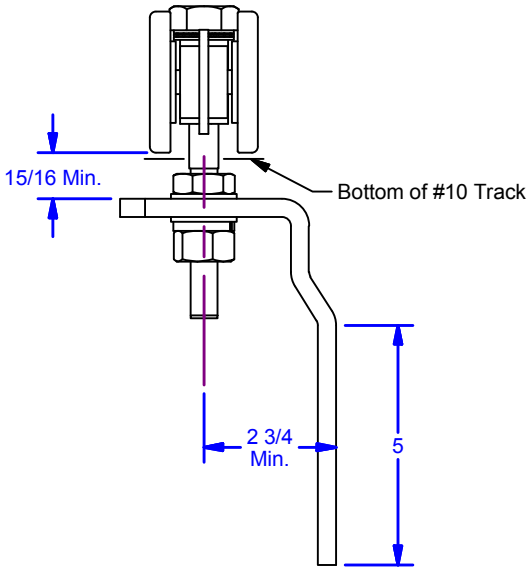

ALL DIMENSIONS IN INCHES

THE INFORMATION CONTAINED IN THIS DRAWING IS THE SOLE PROPERTY OF CROWN INDUSTRIAL. ANY REPRODUCTION IN PART OR AS A WHOLE WITHOUT THE WRITTEN PERMISSION OF CROWN INDUSTRIAL IS PROHIBITED.

ID #:	STOCK PART #:
0002131	9035-P225

MATERIAL:

DESCRIPTION: Slide-Fold Hanger (IN-open) Door up to 250 lbs.

FINISH:	# PCS.	REV:
Powder Coat	1	

CROWN INDUSTRIAL
So. San Francisco, Ca
(650) 952-5150
www.crown-industrial.com

DWG #: 9035
DRAWN:BCM 11/3/2015
SHEET #1
File: 0001253.idw