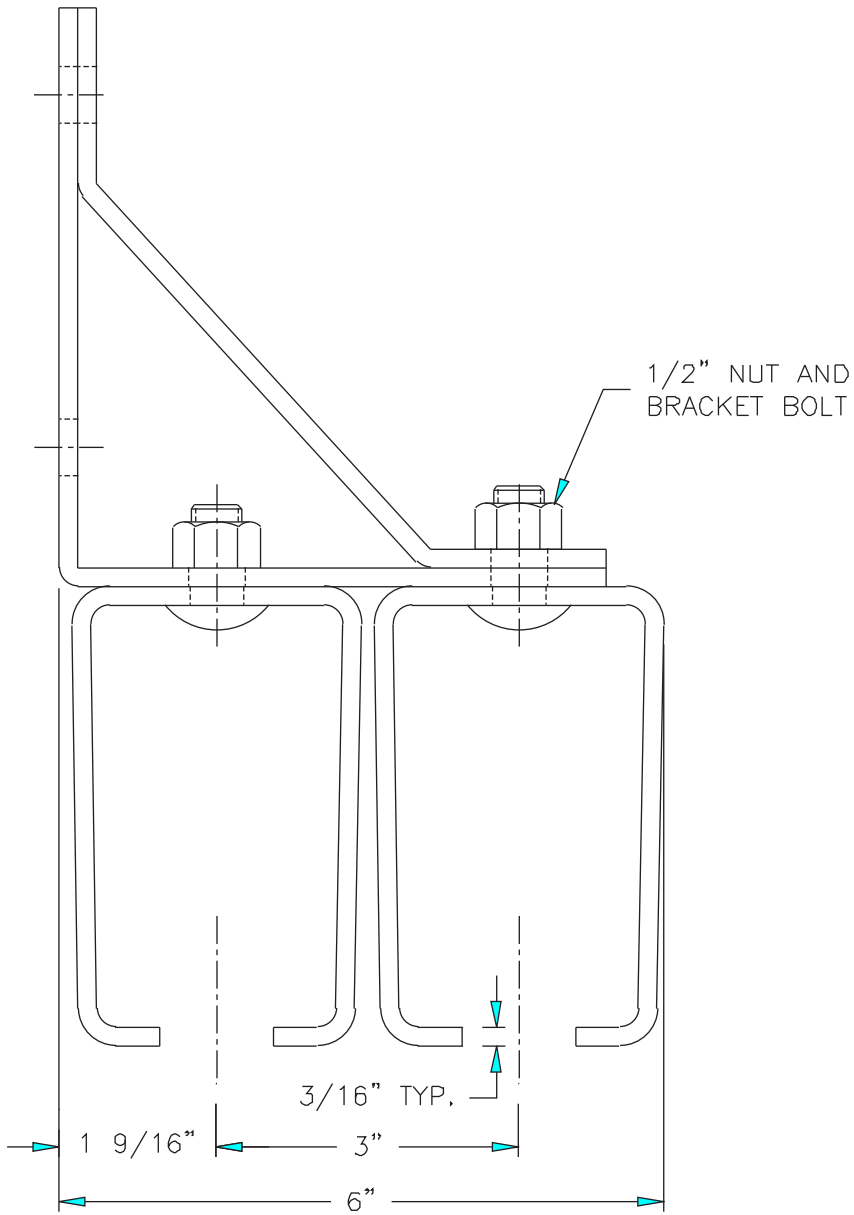

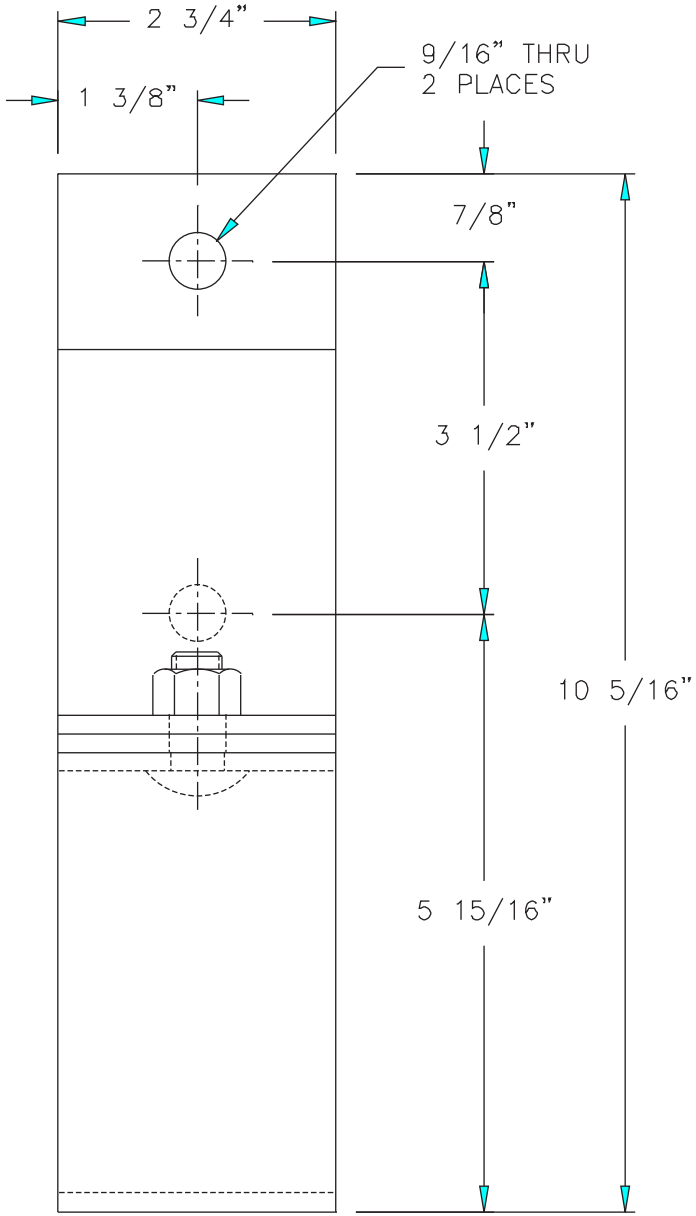

RICHARDS–WILCOX AURORA, IL. 0232.00026 MARCH 1999