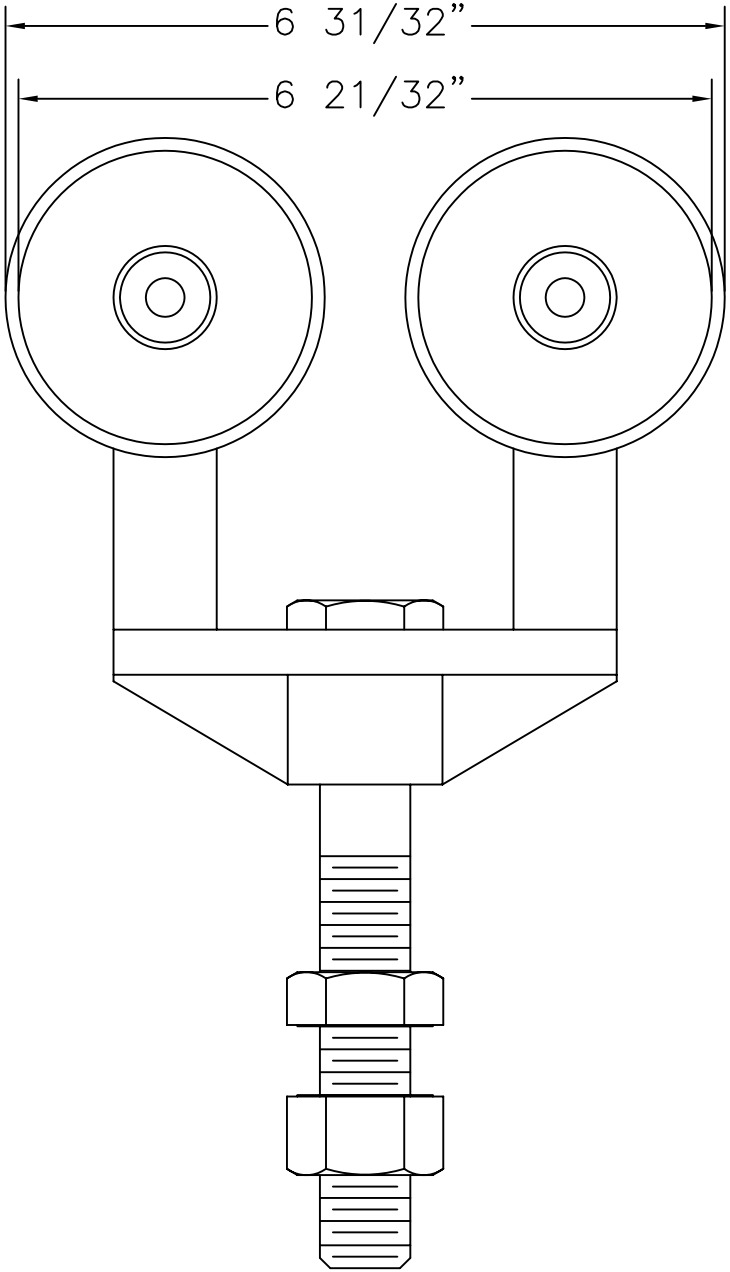

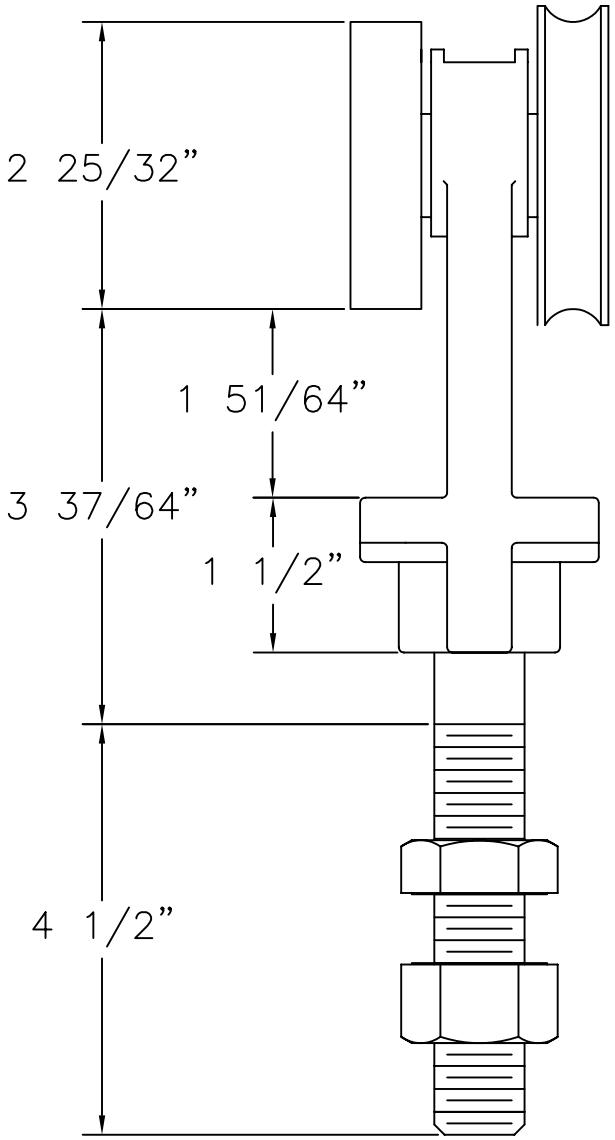

RICHARDS–WILCOX AURORA, IL. 8881.00001 TRUCK ASSEMBLY JUNE 1998